MODELO–BAL–1 1/2–C

SERIE–BAL–400

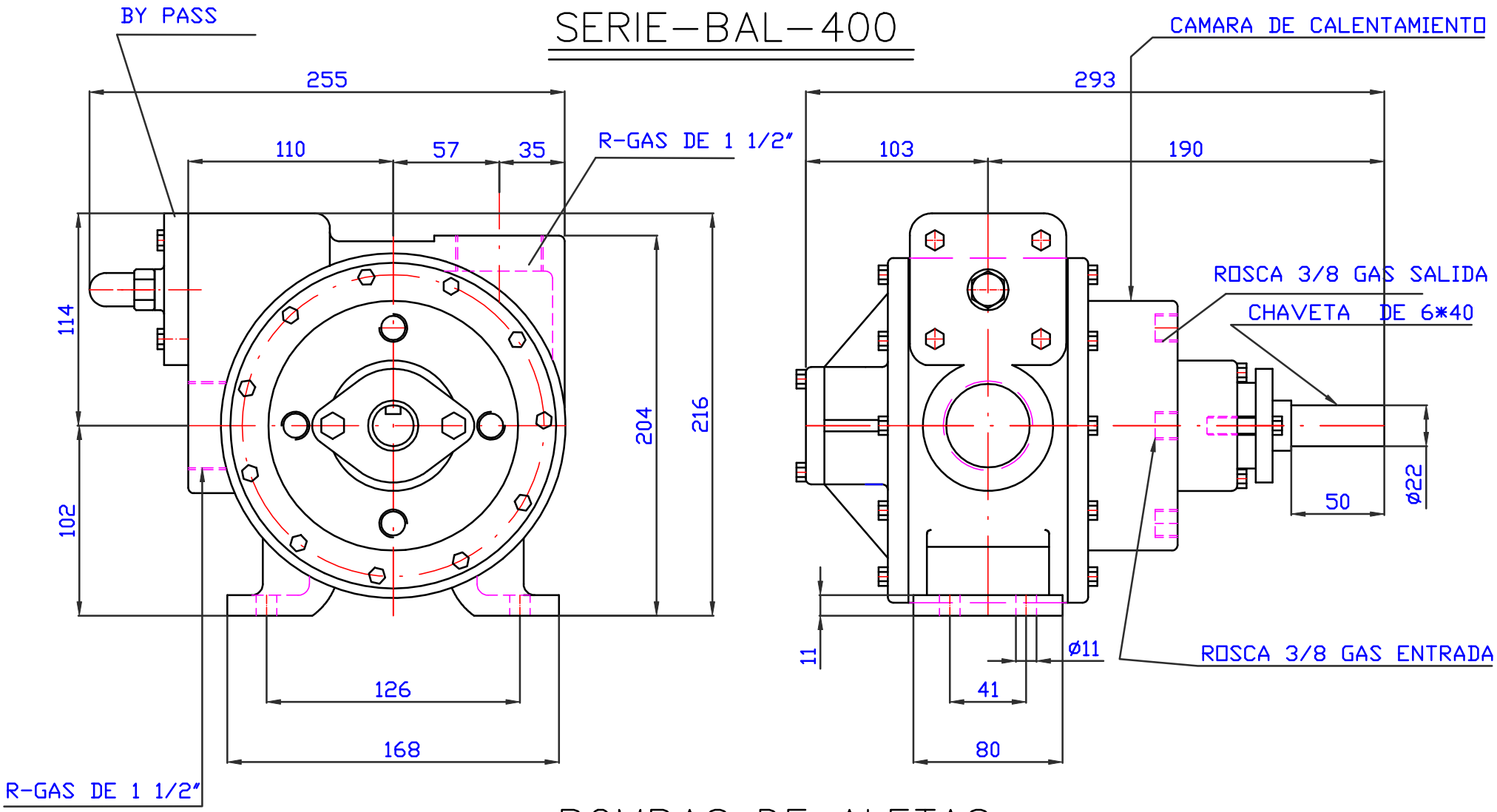

BOMBAS DE ALETAS

BOMBAS TRIEF,S.L.